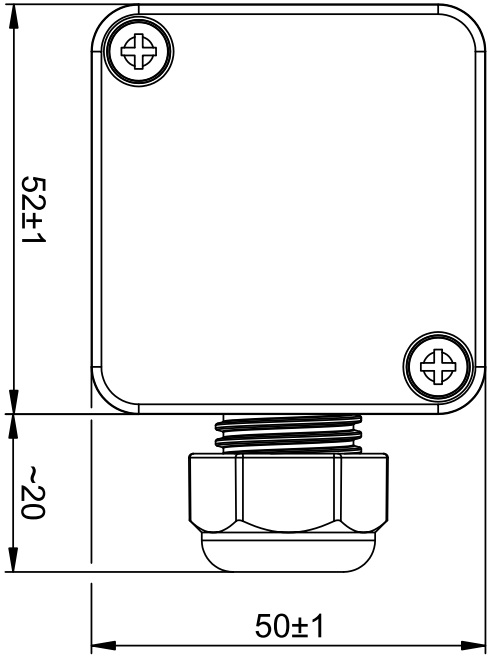

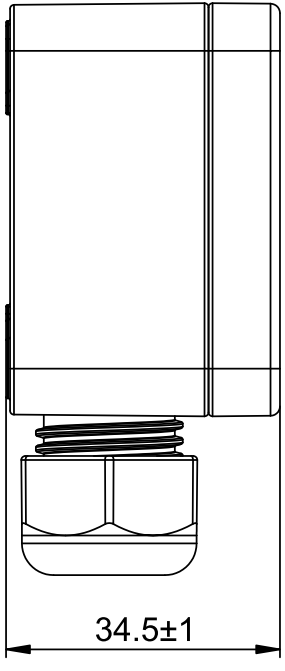

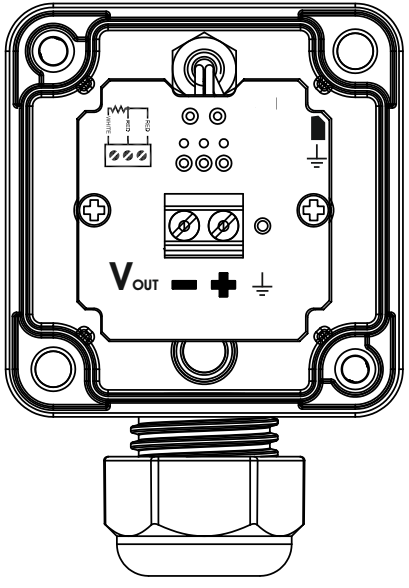

mm