I001001A

Rev. 0 - 26/09/2026

U-CAN TOUCH +

Steam wand with anti scorching system.
Thermal gradient on a gripping point * lower than 10°C after 60 sec. of continuous supply

3/8" G tap threaded cap in BRASS CW510L+T.E.A. (with sealing gasket under sphere)
-tube Ø 12 mm in AISI 304 (double 90-degree fold)
-4-hole plastic sprinkler (BLACK PEEK) Ø 1,5 mm



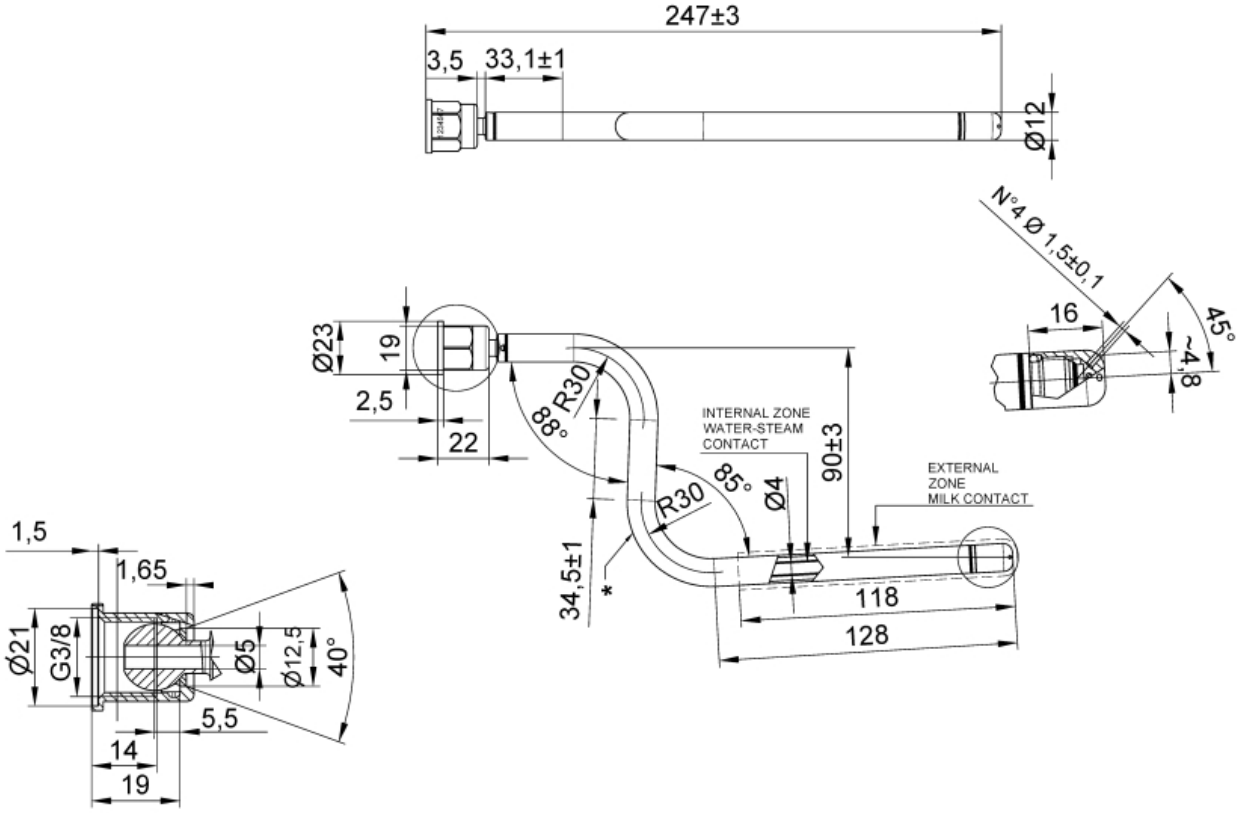

ITALCOPPIE SENSORI srl
Via A. Tonani, 8 - Fraz. S. Giacomo al Campo
26030 Malagnino (CR) - Italy
www.italcoppie.com

WE SENSE TEMPERATURE

TECHNICAL SPECIFICATION

Spherical aticulated joint	OTTONE CW510L AISI 303
Threaded process connection (*) (*) Thread STANDARDS (CYL. GAS in accordance with UNI-ISO 228) (CON. GAS in accordance with UNI-ISO 7-1) (NPT in accordance with ANSI B 1.20.1)	3/8" GAS CIL.
wand tube	Ø 12 mm
tube material	AISI 304
terminal bulb (aerator)	PEEK
Blow-out cap holes number:	4
Blow out cap holes diameter	Ø1,5 mm
Blow-out cap diameter:	Ø12

ITALCOPPIE SENSORI srl
Via A. Tonani, 8 - Fraz. S. Giacomo al Campo
26030 Malagnino (CR) - Italy
www.italcoppie.com